EXPERIMENTAL BEHAVIOUR OF HIGH STRENGTH CONCRETE DEEP BEAMS WITH WEB OPENINGS

TAE-MIN YOO[1], JEUNG-HWAN DOH[1*], HONG GUAN[1] AND SAM FRAGOMENI[2]

[1]*Griffith School of Engineering, Griffith University Gold Coast Campus, Queensland 4222, Australia*
[2] *School of Engineering and Science, Victoria University, Melbourne, Australia*

SUMMARY

This paper focuses on an experimental study undertaken on High Strength Concrete (HSC) deep beams with various opening sizes and locations on the web. The tests cover a scope of variables not covered in previous research. Apart from highlighting the experimental setup, failure loads and typical crack patterns of the test specimens are also reported. Experimental results are then compared with predictions using currently available design methods. The comparison indicates that the predictions overestimate the ultimate strength of these HSC deep beams, and the reduction of the ultimate strength due to web openings is not considered sufficiently in the methods. To rectify the shortcomings of current design formulae, more experimental tests with various opening configurations considering shape and location of openings are recommended.

For Peer Review

1. INTRODUCTION

The utilisation of deep beams within structural engineering practice has grown substantially over the last four decades. More specifically, there has been an increased practise of including deep beams in the design of high-rise buildings, offshore structures, and foundations. A deep beam loaded at any point or loaded continuously over its span distributes this load to its supports, and this can aid in the provision of more open space in a structure when compared with other design methods. Although reinforced concrete deep beams are of considerable interest in structural engineering practice, major codes of practice such as AS3600-2009, ACI318-08 and CSA 1984, still offer little guidance on the design of high strength concrete deep beams, particularly when openings in the web region are provided for essential services and accessibility (Kong, 1990). The need for an accurate design method for deep beams with openings is therefore becoming increasingly necessary.

Web openings in a deep beam significantly affect its structural behaviour as demonstrated in previous studies (Kong and Sharp 1977; Kong *et al*. 1978; Mansur and Alwis 1984; Ray 1990; Almeida and Pinto 1999; Ashour and Rishi 2000; Maxwell and Breen 2000; Tan *et al*. 2003; Yang et al. 2006). A simple structural idealization for predicting the ultimate shear strength of deep beams with web openings was proposed some thirty years ago based on a series of laboratory testing conducted by Kong and Sharp (1977) and Kong *et al*. (1978) and extended upon by Tan et al. (2003). The structural idealization shows the lower and upper paths of load transfer when a web opening is present. It offers a good indication of the ultimate load-carrying capacity of the beam which is affected by the size and location at

* Correspondence to: Jeung-Hwan Doh, Griffith School of Engineering, Griffith University, Gold Coast campus, QLD, Australia, 4222. E-mail: J.doh@griffith.edu.au

which the natural load path is interrupted by an opening (Guan and Doh, 2007). Hence, the purpose of this study is to investigate the behaviour of high strength concrete deep beams with various web opening sizes and locations. To achieve this, an experimental program has been undertaken to obtain data that includes the ultimate load, crack patterns and failure modes.

This paper details the test procedure and analysis of forty three (43) high strength concrete deep beams with various web opening sizes and locations. These beams are split into three groups to investigate a variety of geometric parameters relating to different behaviour characteristics of the beams. Data obtained from testing are then compared to predicted results using methods from Kong *et al.* (1978), Kong and Sharp (1977) and Tan *et al.* (2003).

2. CURRENT DESIGN FORMULA FOR DEEP BEAM WITH WEB OPENINGS

Based on experimental studies, Kong *et al*. (1970, 1978) and Kong and Sharp (1973, 1977) derived design equations for normal and lightweight concrete deep beams with and without web openings. The ultimate shear strength equations for reinforced concrete deep beams are:

$$Q_{ult} = C_1\left[1 - 0.35\frac{x}{D}\right]f_t bD + C_2\sum A_w \frac{y}{D}\sin^2\alpha \tag{1}$$

for solid deep beam, and

$$Q_{ult} = C_1\left[1 - 0.35\frac{k_1 x}{k_2 D}\right]f_t bk_2 D + \sum \lambda C_2 A_w \frac{y_1}{D}\sin^2\alpha_1 \tag{2}$$

for deep beam with web opening

where, A_w = Area of individual web bar, C_1 = empirical coefficient (1.40 for normal strength concrete, 1.35 for light weight concrete), b = breadth (thickness) of beam, D = overall depth, f_t = cylinder-splitting tensile strength of concrete, x = clear-shear-span distance, C_2 = empirical coefficient (300N/mm^2 for deformed steel bar, 130N/mm^2 for plain steel bar), y = depth at which a typical bar intersects the potential critical diagonal crack in solid deep beam, which is approximately at the line joining the loading and reaction points, and λ = an empirical coefficient, equal to 1.5 for web bars and 1.0 for main bars. Other geometric notations are illustrated in Figure 1.

Kong and Sharp (1973, 1977) and Kong *et al*. (1978) made significant contributions to the development of the British Standard and the first term on the right side of Eq. (1) and Eq. (2) expresses the load capacity of a strut. When an opening is in the natural loading path, the first term considers the lower load path. The second term on the right side of the equation articulates the contribution of reinforcement in deep beams. It should be noted however, that these equations are only applicable for concrete strengths less than 46 MPa.

For Peer Review

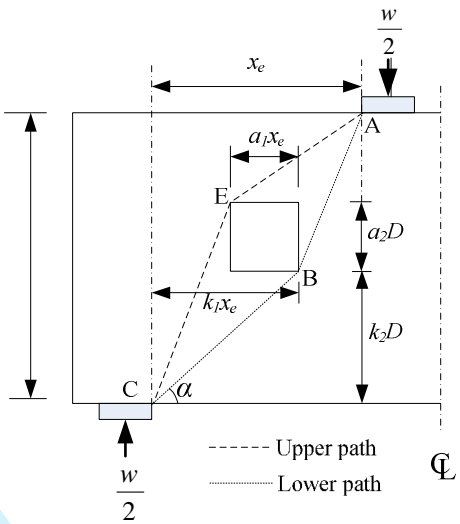

Figure 1. Notation for size and location of opening (half length) (Kong and Sharp, 1977).

Tan et al. (1995, 1997 & 2003) and Leong and Tan (2003) investigated the effects of high strength, shear span to depth ratios and web reinforcement ratios of the beams using both an experimental program and numerical analysis. The design shear strength for high strength concrete deep beams is

$$V_n = \frac{1}{\dfrac{\sin 2\theta_s}{f_t A_c} + \dfrac{1}{f'_c A_{str} \sin\theta_s}} \tag{3}$$

where $$f_t = \frac{2A_s f_y \sin\theta_s}{\dfrac{A_c}{\sin\theta_s}} + \frac{2A_w f_{yw} \sin(\theta_s + \theta_w)}{\dfrac{A_c}{\sin\theta_s}} \cdot \frac{d_w}{d} + f_{ct} \tag{4a}$$

and $$\tan\theta_s = \frac{h - \dfrac{l_a}{2} - \dfrac{l_c}{2}}{a} \tag{4b}$$

in which, θ_s = angle between the longitudinal tension reinforcement and the diagonal strut, f_t = combined tensile strength of reinforcement and concrete, A_c = area of concrete section, A_{str} = cross-sectional area of diagonal strut, f_y = yield strength of longitudinal steel reinforcement, A_w = area of web reinforcement, f_{yw} = yield strength of web reinforcement, θ_w = angle between the web reinforcement and the axis of beams at the intersection of the reinforcement and diagonal strut, d_w = distance from the beam top to the intersection of the web reinforcement with the line connecting the support centre and the load centre, d = effective depth, f_{ct} = tensile strength of concrete, h = overall height of deep beam, l_a = height of bottom node, l_b = width of support bearing plate, and a = shear span measured between concentrated load and support point.

Eq. (2) has limitation on the web opening size and location with respect to the x/D ratio within the 0.25 to 0.4 range. However Eq. (3) does not give any design limitations in regards to the opening size, location or orientation of the opening size; or for that fact, the geometry of the beam itself, including the x/D or L/D ratio. Either they have not considered the effect of these variables, or they are confident that the equation will work under any circumstance.

For Peer Review

3. EXPERIMENTAL PROGRAM

3.1 Test setup

In order to utilise previously published research (Kong *et al*. 1978, Tan et al, 2003) for an in-depth comparison, an additional forty three deep beams with various opening sizes and locations were cast and tested to failure in this study. The overall dimensions of all deep beam specimens were 2400 mm × 600 mm × 110 mm thick, as detailed in Figure 2 (a) & (b). For specimens under the single-point loading shown in Figure 2(a), the shear span was 900mm, which resulted in a clear span to depth (l/d) ratio of 3 and a shear span to depth ratio (a/d) of 1.5. For those beams under two-point loading shown in Figure 2(b), l/d was 600mm and a/d equalled1.0.

The size of openings were varied from 60mm×60mm to 210mm×210mm and the opening configurations for each specimen were detailed in Table 1 with details of geometric notations presented in Figure 3 (a) & (b). Each beam consisted of two 20 mm diameter deformed reinforcement bars, with nominal yield stress of 500 MPa, in the longitudinal direction located close to the bottom of the beam. Each bar had a length of 2700mm and a 90 degree cog at each end with a vertical length 200mm to prevent end anchorage failure. The concrete was supplied by a local ready-mix company and the compressive concrete strengths for all specimens were mainly high strength varying from 63 to 91 MPa. It should be noted that four deep beam specimens (Group 8) comprised of concrete with a lower compressive strength of 34 MPa.

The test frame was designed to support a jack of 80 tonne capacity. Dial gauges were used to measure the vertical deflections of the beams at the midspan during testing (see Figure 4 (a) & (b)). The beams were loaded at 0.1 kN increments up to failure. At each load increment, crack patterns and the deflections were also recorded.

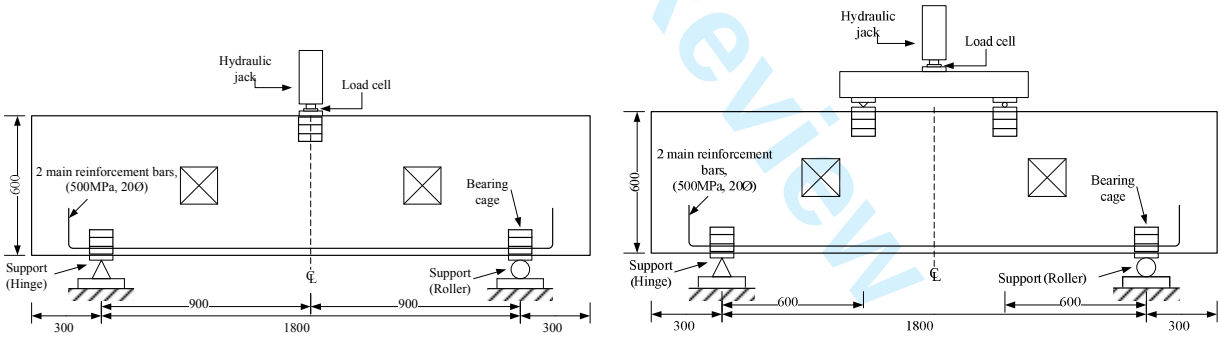

(a) Specimens under single-point loading

(b) Specimens under two-point loadings (Stage 10 Specimens)

Figure 2. Details of deep beam specimens (dimensions in mm)

For Peer Review

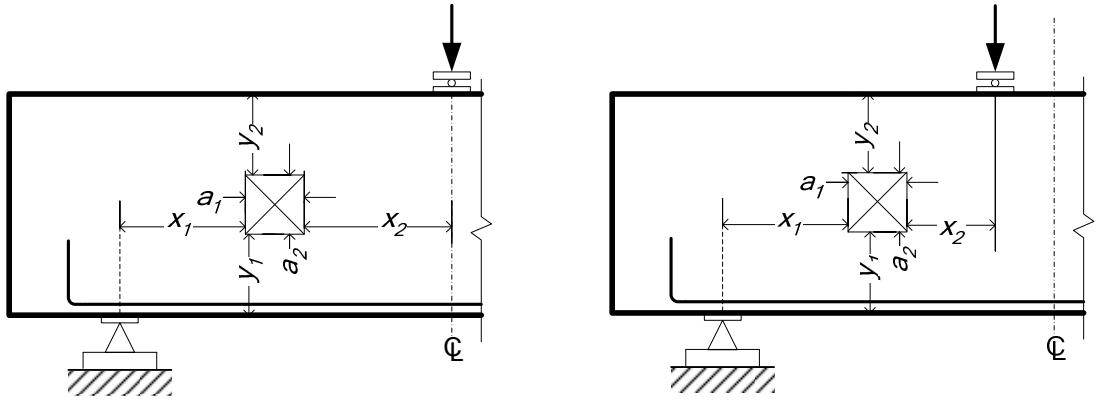

(a) Specimens under single-point loading (Stages 1 to 9)

(b) Specimens under two-points loading (Stage 10)

Figure 3. Notations for test specimens

(a) Side View

(b) Front view

Figure 4. Test setup

3.2 Test specimens

The beams were separated into three groups to ensure a variety of parameters relating to different behaviour characteristics was investigated. The varying parameters included concrete strengths, opening sizes, shapes, locations, and shear span-to-depth ratios. Dimensions of each deep beam specimen are detailed in Table 1 and in Figures 5 to 7.

3.2.1 Group 1

Group 1 specimens were divided into four stages (Stage 1, 2, 3 & 4) to observe the effect of location of a web opening on the high strength concrete (HSC) deep beams. There were four specimens cast for each stage in this group. The web opening remained at a standard size of 60mm×60mm with its various positions. The varying parameters were:

- Stage 1- the location of the web opening remained at mid-depth of the beam, but was moved sideways for each of the allocated test specimens (see Figure 5(a));

- Stage 2- the location of the web opening remained at mid-depth of the beam but was moved up or down for each of the test specimens(see Figure 5(b));
- Stage 3- the location of the web opening was positioned at different locations diagonally – parallel to the critical load path (see Figure 5(c));
- Stage 4- the location of the web opening was positioned at different locations diagonally in the beam, but perpendicular to the critical shear load path (see Figure 5(d)).

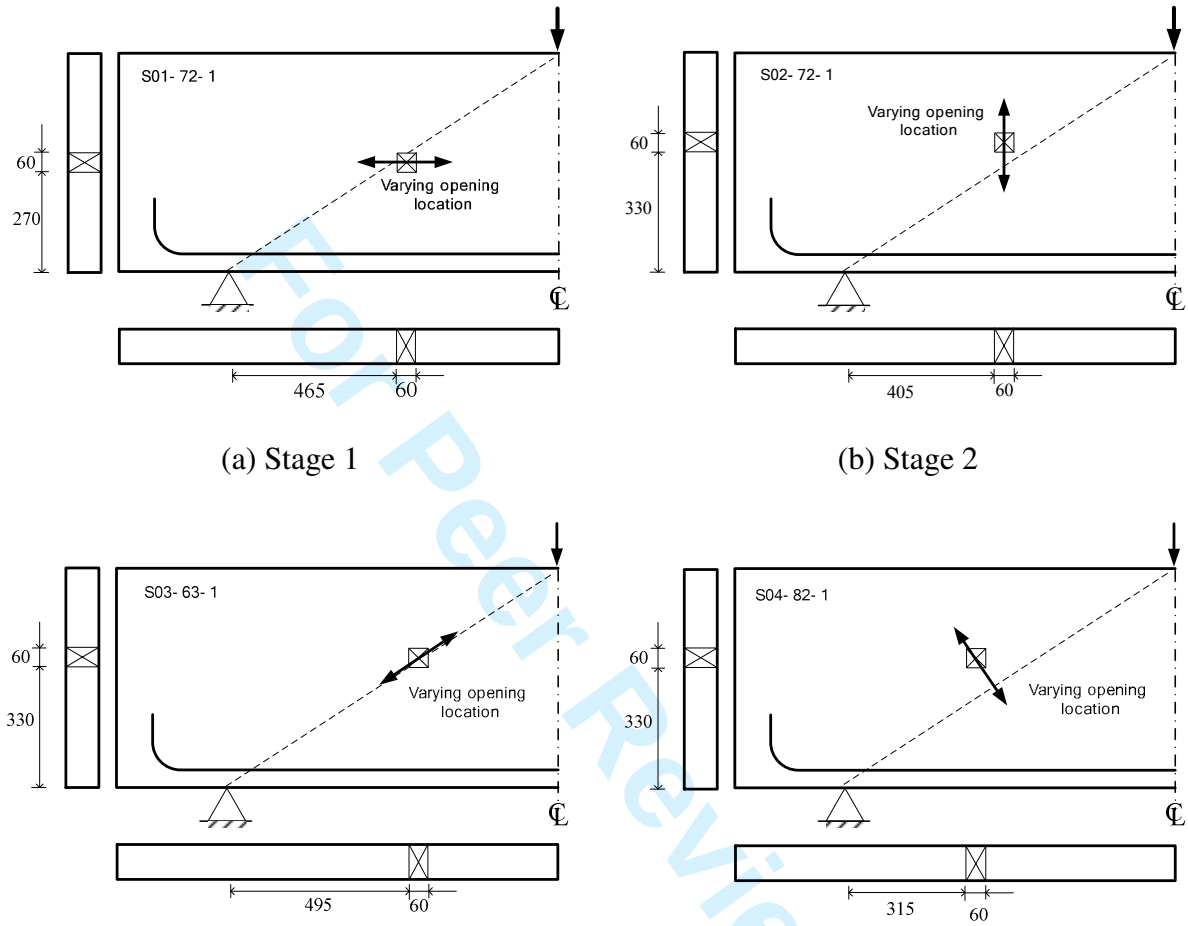

(a) Stage 1 (b) Stage 2

(c) Stage 3 (d) Stage 4

Figure 5. Group 1 test specimens (dimensions in mm)

For Peer Review

3.2.2 Group 2

Group 2 beams consisted of three stages (Stages 5, 6 & 7) to investigate the effect of web opening size and orientation on the behaviour of deep beams. The variables are:

- Stage 5- three HSC deep beams each with an increasing web opening size. The location of the centre of the opening remained at mid-depth of the beam (see Figure 6(a));
- Stage 6- six HSC deep beams – the web opening was initially 120×60mm, with its location moving either left or right, or increasing in size to the left or right (see Figure 6(b));
- Stage 7- six HSC deep beams – the web opening was initially 60×120mm, with its location moving either up or down, or increasing in size upwards or downwards(see Figure 6(c)).

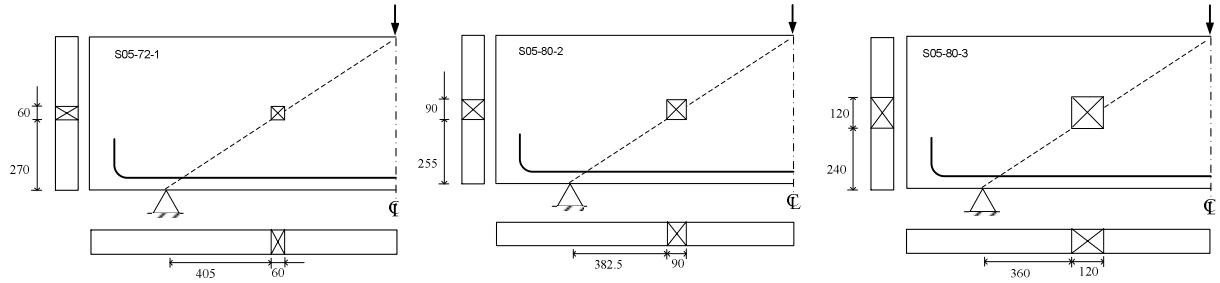

(a) Stage 5

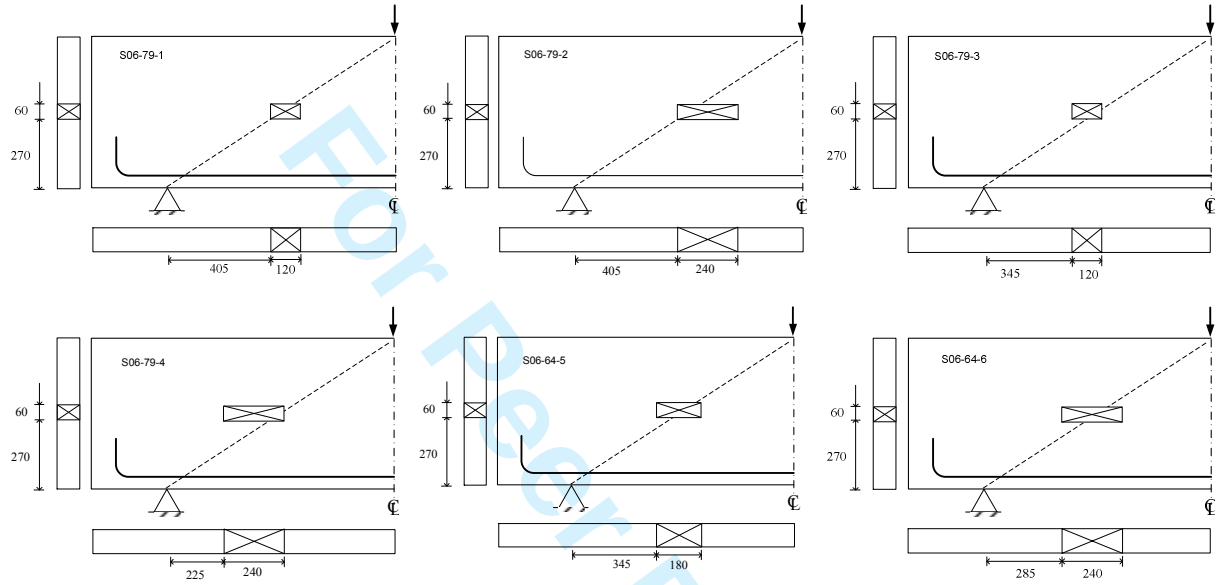

(b) Stage 6

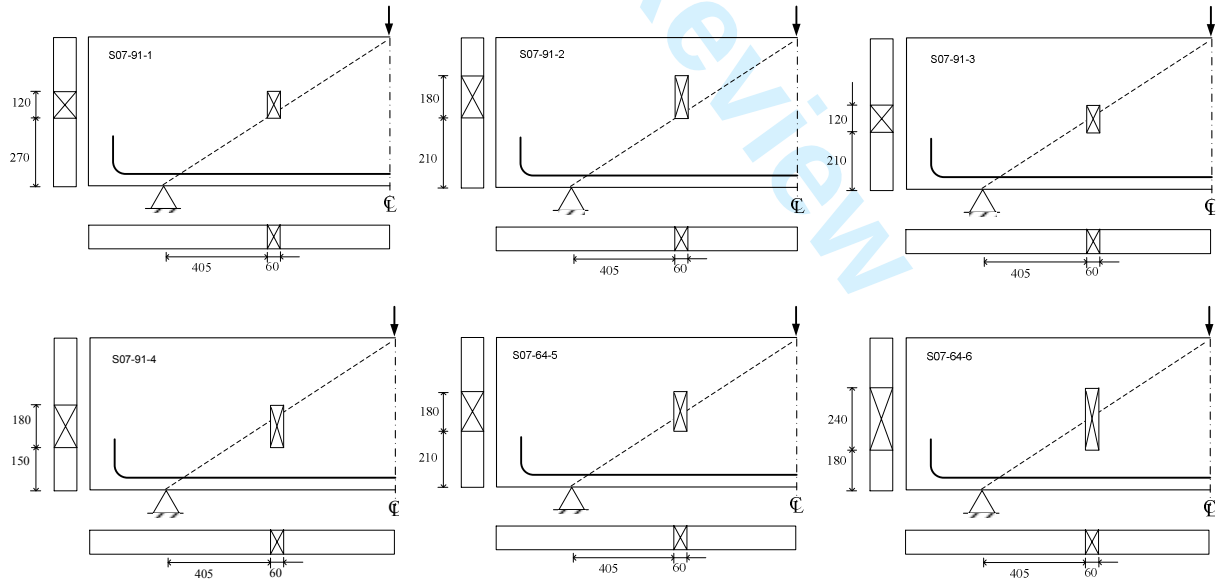

(c) Stage 7

Figure 6. Group 2 test specimens (dimensions in mm)

For Peer Review

3.2.3 Group 3

Group 3 specimens also comprised of four stages (Stages 8, 9 & 10), aimed at evaluating the effect of concrete strengths, opening sizes and shear span-to-depth ratios on beams with and without web openings. The variables were:

- Stage 8- four normal strength concrete deep beams each with an increasing web opening size. The location of the centre of the opening remained at mid-depth of the beam. Shear span to depth ratio was 1.5. (see Figure 6(a));
- Stage 9- four high strength concrete deep beams – one solid deep beam and three with an increasing web opening size. The location of the centre of the opening remained at mid-depth of the beam. Shear span to depth ratio was 1.5 (see Figure 6(b));
- Stage 10- four deep beams with web opening configurations the same as Stage 9 beams but the shear span to depth ratio decreased to 1.0 (see Figure 6(c)).

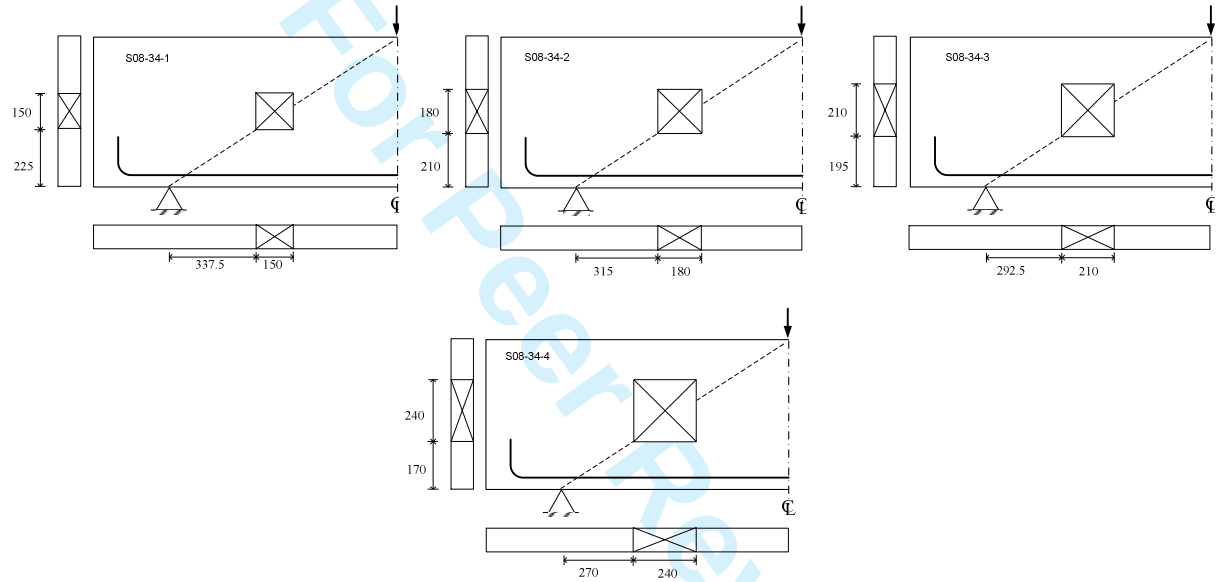

(a) Stage 8

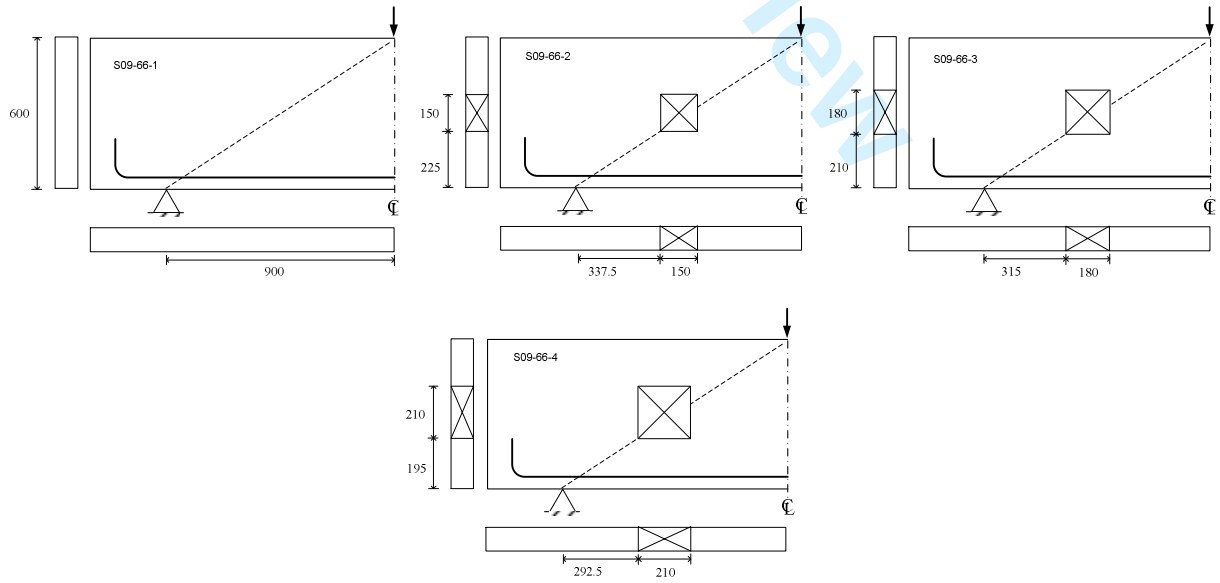

(b) Stage 9

For Peer Review

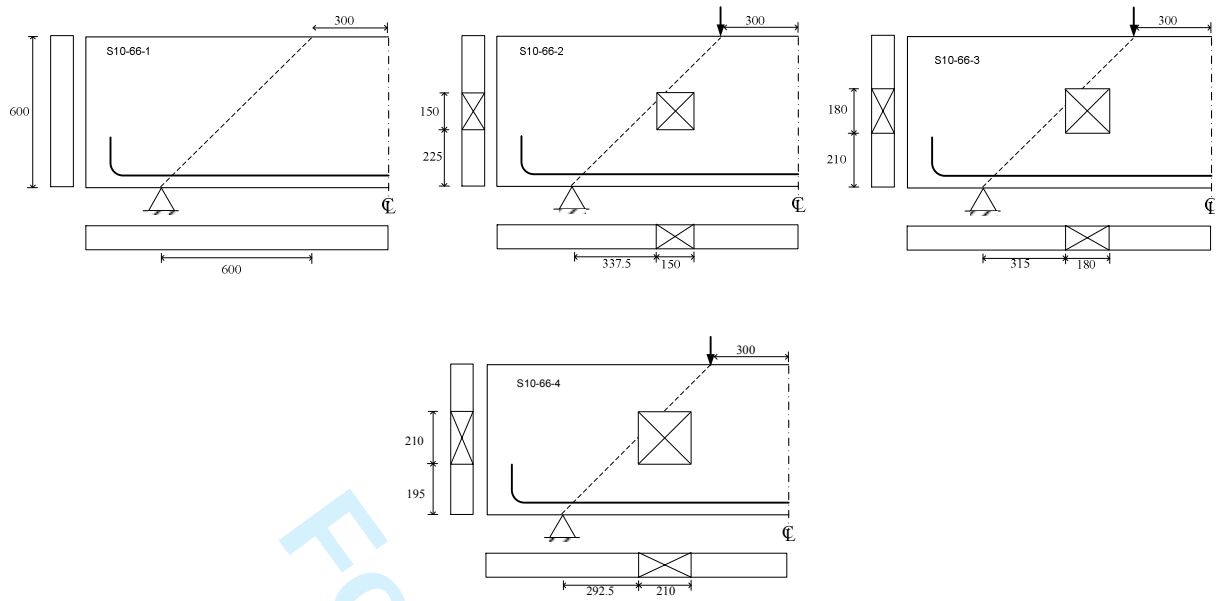

(c) Stage 10

Figure 7. Group 3 test specimens (dimensions in mm)

4. RESULTS AND DISCUSSION

4.1Crack patterns

Typical crack patterns for a sample of the deep beams tested are given in Figures 8 to 17. All of the beams exhibited crack patterns and failure modes that are consistent with the expected behaviour of simply supported deep beams with openings. In the majority of cases flexural type cracks were evident in initial stages. These crack developments ceased to propagate once shear cracks appeared near the edge of corners and near the load point and support conditions. Most specimens developed flexural cracks once loading reached approximately 30% of the ultimate strength. At 70-90% of the ultimate load, diagonal cracks generally developed around the corner of the web openings toward the supports and also under load points. These crack propagations formed in rapid manner when loading approach failure. Overall it seems openings played a major role in cracking behaviour, with more evidence of shear type cracking, whereas the panels with no openings (Figures 14 and 16) exhibit the more typical shear-flexure type cracking behaviour.

.

Figure 8. Failure crack patterns S03-63-1

Figure 9. Failure crack patterns S03-63-4

For Peer Review

Figure 10. Failure crack patterns S05-72-1

Figure 11. Failure crack patterns S06-79-1

Figure 12. Failure crack patterns S07-64-5

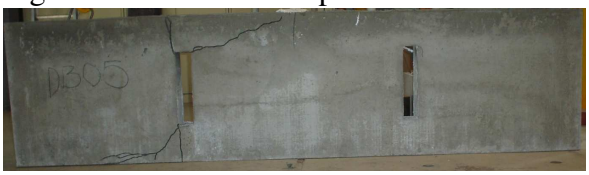

Figure 13 Failure crack patterns S07-64-6

Figure 14. Failure crack patterns S09-66-1

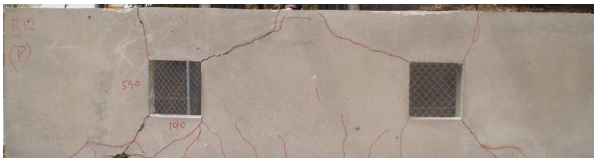

Figure 15. Failure crack patterns S09-66-3

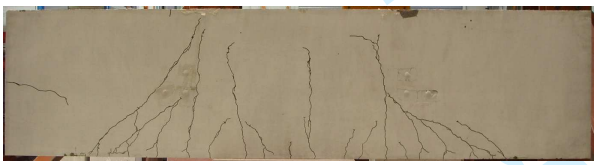

Figure 16. Failure crack patterns S10-66-2

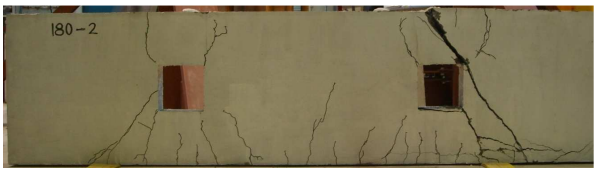

Figure 17. Failure crack patterns S10-66-3

4.2 Ultimate Strength Behaviour: Stages 1 and 2

Stage 1 beams (along with S05-72-1 in Stage 5) are designed to observe the relationship of a change in opening location in the horizontal direction. Table 2 presents the ultimate shear strength from the test results, V_{Exp}, which shows that as the opening moves toward the critical load path, the ultimate strength of the deep beam decreases. This becomes clearer in Figure 18, where the beam with opening on critical load path produce the lowest ultimate strength. The reduction in ultimate strength can be attributed to the decrease of the effective compressive area of the concrete.

Beams S01-72-2 S01-72-3 and S01-72-4 failed at approximately the same ultimate load, indicating that shear strength is relatively unaffected when the opening is way from the critical load path.

Also presented in Table 2 are the predicted strengths using Equations (2) and (3), $V_{Eq(2)}$ and $V_{Eq(3)}$. The predicted strengths are much lower than actual test results, and in fact are more than 50% less in most cases. Test results indicate that with increasing of k_1 from 0.29 to 0.59 (ie. Opening tending towards critical path), the ultimate strength of the beam decreases by about 20%. This decrease appears much greater using prediction results. The differences between actual and predicted strengths using Equations (2) and (3) is also highlighted in Figure 20, with both predictions indicating significant ultimate strength decrease with an increase in k_1 ratio. However, this trend not supported by the experimental results. Note that in testing, S05-72-1 had a lower ultimate strength than the other four specimens due to the location of the opening at the largest disturbance to the compressive strut.

Stage 2 beams are designed to observe the relationship of a change in opening location in the vertical direction. Previous research suggests that as the opening moves away from the critical load path the strength of the beam will increase, this trend was also observed in the experimental results. It can be seen from Figure 19 that the strength of the beam decreases as the opening is moved to a lower position. The reason for this may be that by lowering the position of the opening, the effective depth of the neutral axis tends upwards, meaning there is more concrete in tension. The area gain in tension has a larger effect than the decrease of area in compression, resulting in a lower ultimate load. Figure 21 shows the ultimate shear load versus depth from opening to bottom (k_2). It can be seen from this figure that predictions of ultimate strength with Equations (2) and (3) increase as the web opening moves away from the soffit of the beam. The ratios of the increments of the predicted results are near uniform and thus conform to a linear relationship. Once again, the predicted strengths are much lower than actual test results. Therefore the ultimate strengths predicted by previous researchers are too conservative

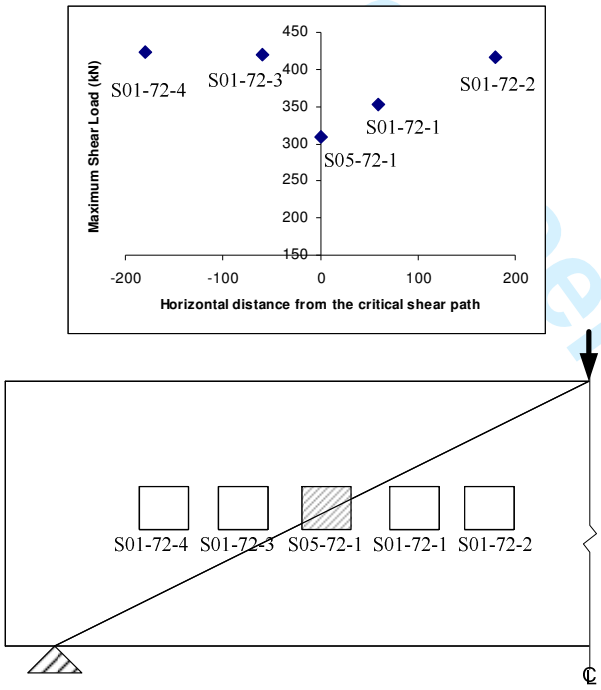

Figure 18 Horizontal Position of Opening versus Ultimate Load

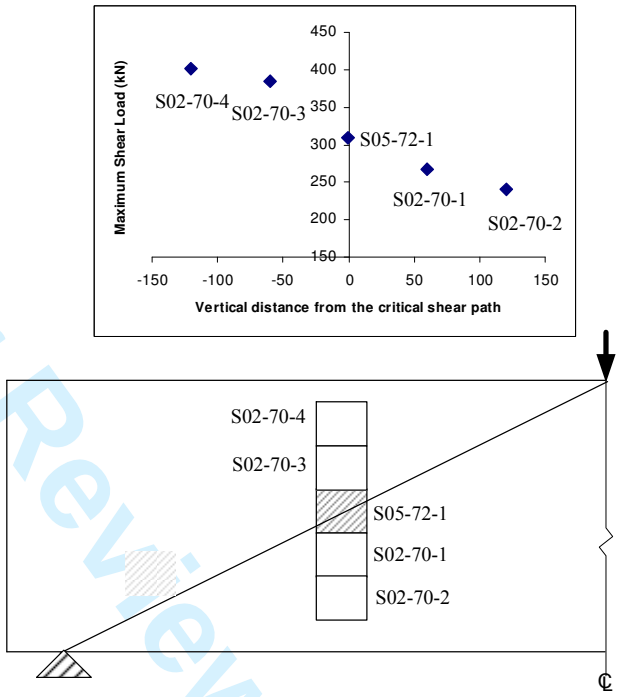

Figure 19 Vertical Position of Opening versus Ultimate Load

4.3 Ultimate Strength Behaviour: Stages 3 and 4

Stage 3 represents the varying of both horizontal and vertical opening location ratios, k_1 and k_2. Experimental results along with predictions are again presented in Table 2 and graphically in Figure 22. In general, the test results and the ultimate strength predictions increased with the increase of k_1 and k_2. However the test ultimate strength of S03-63-2 illustrated an unexpected different behaviour with an ultimate strength lower than that of S03-63-1. This is possibly due to the shape of the strut and the reduction effect caused by the opening. The strut is actually representative of a bottle shape with the stress from the load area spread out along the diagonal load path. When the opening is located at the neck area of the bottle shape strut,

the reduction effect due to the opening is greater than when the opening is located proximate to neutral axis of the beam. The predicted ultimate load capacities using Equations (2) and (3) are again lower than experimental values, and increase as the web opening moves away from the soffit, even though the web opening is located close to the loading zone.

The test ultimate strengths of the Stage 4 specimens are similar to each other when the openings were located above the critical zone as shown in Table 2 and indicated in Figure 23. However, the ultimate strengths decreased significantly when openings were located in the flexural zone. The conservative nature of both Equations (2) and (3) was evident for the high strength concrete deep beams tested. It should be noted that Equation (2) actually gives a negative result for the S04-82-4 implying zero strength as shown in Table 2. This highlights the need for a modified design equation to predict the maximum shear strength for such high strength concrete deep beams with openings located near the flexural zone.

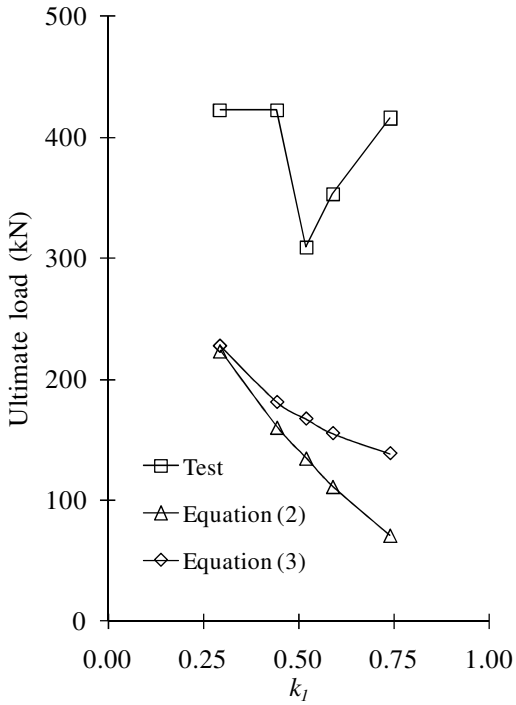

Figure 20. V versus k_1 - Stage 1 specimens

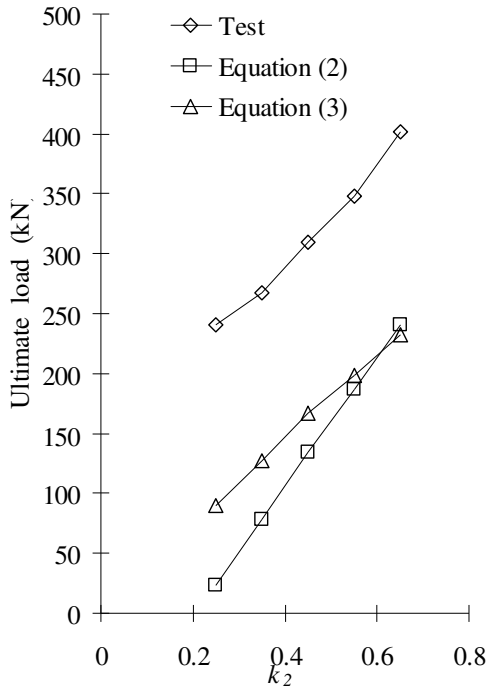

Figure 21. V versus k_2 - Stage 2 specimens

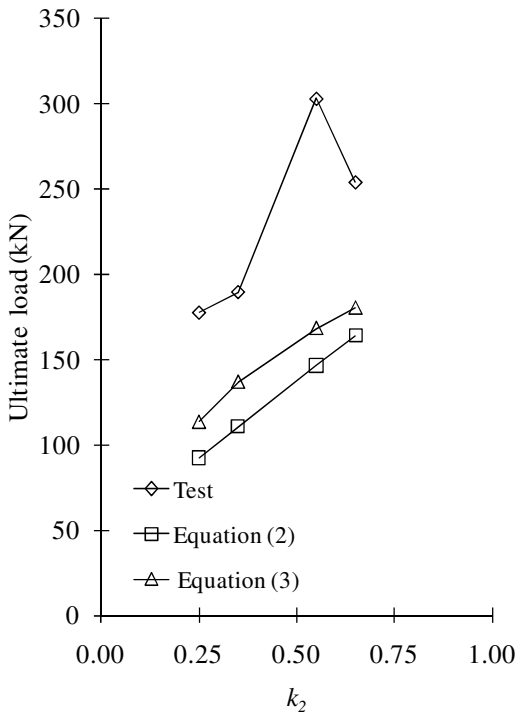

Figure 22. V versus k_2 - Stage 3 specimens

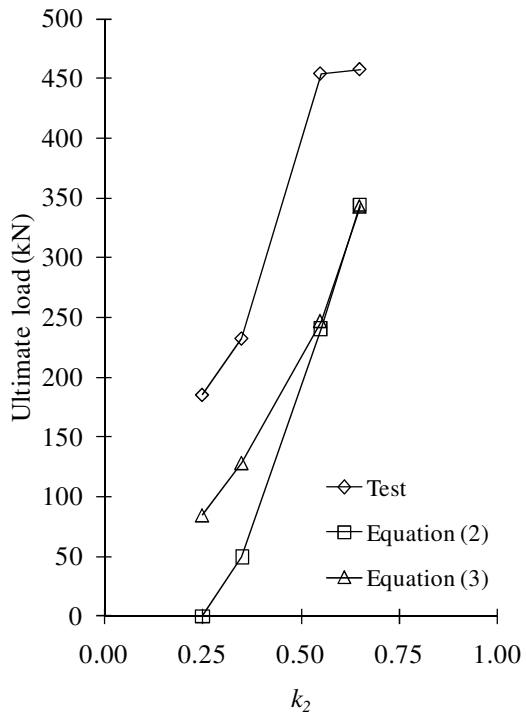

Figure 23. V versus k_2 - Stage 4 specimens

4.4 Ultimate Strength Behaviour: Stages 6 and 7

Stage 6 and 7 beams were tested to observe the effect of web opening size and orientation, where the web opening was elongated incrementally in different directions. Similar to the Stage 2 beams, the ultimate shear loads in Stage 6 were found to increase linearly with an increase in k_1 value. Also it was found that for Stage 7 beams there was an increase of about 44 % in ultimate shear strength for an increase of k_2 from 0.25 to 0.45. Interestingly, in these stages, it was found that the equations gave a closer prediction of actual ultimate strength. It can be noted that opening sizes are larger than in previous stages resulting in much lower experimental ultimate strengths.

4.4 Ultimate Strength Behaviour: Stages 5, 8, 9 and 10

As can be seen in Table 2, as the web opening size increases a significant decrease in the ultimate strength occurs in all these stages. The ultimate loads achieved for the single point loaded deep beams (Stage 9) were much lower when compared to the corresponding two-point loaded deep beams (Stage 10). Thus a decrease in shear span ratio will lead to an increase in the ultimate strength. This effect was more pronounced when the compressive strength of the concrete was higher.

A further significant observation can be made between normal and high strength concrete deep beams using Table 2.. For the normal strength concrete deep beams of Stage 8, an increase in the opening size from 150mm to 210mm led to a strength reduction of 17.8%. The increased size of the web opening was a more significant factor in high strength concrete deep beams where it was observed that an increase in the opening size from 150mm to 210mm led to a strength reduction of 34.4% and 70.0% for single point loaded beams (Stage 9) and double-point loaded beams (Stage 10), respectively. For beams loaded at two points (Stage

Peer Review

10), greater reduction in shear strength of the deep beams can be attributed to the influence the larger opening had on the shear path.

4.5 Overall Comparison study: predicted versus actual ultimate strengths

As highlighted in Table 2, the calculated ultimate strength using Equations (2) and (3) proposed by previous researchers were compared with the experimental test results of the 43 deep beams with and without web openings. Even though the proposed Equation (2) gives a safe estimate of failure load for all panels with a mean (Predicted/Experimental) of 0.57 and standard deviation of 0.23, the result is quite conservative. Also for some predictions such as when the opening size increases and the opening approaches nearer to the bottom of the beam, Equation (2) yields negative strength values which indicate zero capacity. The reason is that the empirical coefficients obtained from the previous research for normal strength or lightweight concrete are not valid for the high strength concrete deep beams with openings in this research. Hence the failure load predictions obtained from this method produce greater discrepancies.

On the other hand, Equation (3) gives a more acceptable mean of 0.82 ratio (compared to Equation (2)), but a higher standard deviation of 0.33. There are a number of ratios that are greater than 1, suggesting that the equation can overestimate the failure load of the high strength concrete panels tested with various opening configurations at times. It is therefore evident that, even though Tan *et al*. (2003) have extensively investigated and proposed design equations for normal strength concrete deep beams, modifications are still required to produce a satisfactory design formula for high strength concrete deep beams, particularly when openings are located near critical shear paths.

The approach used in Equation (3) utilises the more modern strut-and-tie method that accounts for the flow of forces around the openings. This method uses ratios of the forces in the upper and lower load paths, and as such is iterative and can be quite lengthy if web reinforcement is present. It can also be seen from the comparison results that the equation is conservative in describing the strength of beams with web openings located away from the critical shear path.

5. CONCLUSION

An experimental program has been undertaken to investigate the applicability of current design methods for concrete deep beams with various web opening configurations. A comparative study indicates that the currently available design methods proposed by previous researchers are inadequate in their strength predictions, particularly for deep beams with high strength concrete. In such cases the formulae can yield conservative and at times overestimate strengths. They can also produce negative strength values which indicate zero load-bearing capacity, which was found to be incorrect in this experimental evaluation. Further, it was generally found that the accuracy of both proposed design procedures decreased as the distance from the critical load path increased.

Consequently the study found that the concrete deep beams have significantly reduced strengths with various web opening sizes and its locations. The current design methods do not adequately account for these variations. In view of the significant shortcomings, there is a need to amend current design formulae. The presented results give a general overview of trends. More detailed analysis is required before a reliable prediction formula can be established. This may include various support conditions, shear span to depth ratios and varying web steel ratios and orientation.

For Peer Review

REFERENCES

ACI318-08. 2008. Building Code Requirements for Structural Plain Concrete. *American Concrete Institute*, Detroit.

AS3600-2009. 2009. Concrete Structures", *Standards Australia*. Sydney, Australia, 2009.

Ashour, A.F. & Rishi, G. 2000. 'Tests of reinforced concrete continuous deep beams with web openings', *ACI Structural Journal* **97**(5): 418-426.

Eun, H.C, Lee, Y.H., Chung H.S. and Yang, K.H. 2006. On the Shear Strength of Reinforced Concrete Deep Beam with Web Opening. *The Structural Design of Tall and Special Buildings* **DOI**: 10.1002/tal.306.

Guan, H., & Doh, J. 2007. Development of Strut-and-Tie Models in Deep Beams with Web Openings. *Advances in Structural Engineering* **10**(6): 697-711.

Kong, F.K., Robins, P.J., & Cole, D.F. 1970. Web Reinforcement Effects on Deep Beams. *ACI Journal* **67**(12): 1010-1017.

Kong, F.K. & Sharp, G.R. 1973. Shear strength of lightweight reinforced concrete deep beams with web openings. *The Structural Engineer* **51**(8): 267-275.

Kong, F.K. & Sharp, G.R. 1977. Structural idealization for deep beams with web openings. *Magazine of Concrete Research*, **29**(99): 81-91.

Kong, F. K., Sharp, G.R., Appleton, S.C., Beaumont, C.J., & Kubik, L.A. 1978. Structural idealization for deep beams with web openings: further evidence. *Magazine of Concrete Research* **30**(103): 89-95.

Kong, F. K. 1990. Reinforced Concrete Deep Beams. New York: Routledge.

Leong, C.L. & Tan, K. H. 2003. Proposed Revision on CIRIA Design Equation for Normal and High Strength Concrete Deep Beams. *Magazine of Concrete Research* **55**: 267-278.

Mansur M.A. & Alwis W.A.M. 1984, Reinforced fibre concrete deep beams with web openings, *International Journal of Cement Composites and Lightweight Concrete* **6**(4): 263-271.

Maxwell, B.S. & Breen, J.E. 2000. Experimental evaluation of strut-and-tie model applied to deep beam with opening, *ACI Structural Journal* **97**(1): 142-149.

Ray S.P. 1991, Deep beams with web openings. *Reinforced Concrete Deep Beams* 60-94.

Tan, K. H. & Mansur, M. A. 1992, Partial Prestressing in Concrete Corbels and Deep Beams. *ACI Structural Journal* **89**: 251-262.

Tan, K.H, Tong, K, & Tang, C.Y. 1997. Effect of web reinforcement on high strength concrete deep beams. *ACI Structural Journal* **94**(5): 572-82.

Tan, K. H., Kong, F. K., Teng, S. & Guan, L. 1995. High-Strength Concrete Deep Beams with Effective Span and Shear Span Variations. *ACI Structural Journal* **92**: 1-11.

Tan, K. H., Lu, H.Y. & Teng, S. 1999. Size Effect in Large Prestressed Concrete Deep Beams. *ACI Structural Journal* **96**: 937-946.

Tan, K.H., Tong, K., & Tang, C.Y. 2003. Consistent strut-and-tie modelling of deep beams with web openings. *Magazine of Concrete Research* **55**(1): 65-75.

Yang, K.H., Eun, H.C., & Chung, H.S. 2003. Shear characteristics of high-strength concrete deep beams without shear reinforcement. *Engineering Structures* **25**(8): 1343-52.

For Peer Review

Yang, K.H., Eun, H.C., & Chung, H.S. 2006. The influence of web openings on the structural behavior of reinforced high-strength concrete deep beams. *Engineering Structures* **28**(13): 1825-1834.

Yang, K.H., Chung, H.S. & Ashour, A.F. 2007. Influence of inclined web reinforcement on reinforced concrete deep beams with openings, *ACI Structural Journal* **104**(5): 580-589.

For Peer Review

Table 1 Web Opening configuration and Concrete Strength

		Specimens	$f_c^{'}$ (MPa)	x_1 (mm)	x_2 (mm)	y_1 (mm)	y_2 (mm)	a_1 (mm)	a_2 (mm)	k_1	k_2
Group 1	Stage 1	S01-72-1	72	465	375	270	270	60	60	0.59	0.45
		S01-72-2		585	255	270	270	60	60	0.74	0.45
		S01-72-3		345	495	270	270	60	60	0.44	0.45
		S01-72-4		225	615	270	270	60	60	0.29	0.45
	Stage 2	S02-70-1	70	405	435	330	210	60	60	0.52	0.55
		S02-70-2		405	435	390	150	60	60	0.52	0.65
		S02-70-3		405	435	210	330	60	60	0.52	0.35
		S02-70-4		405	435	150	390	60	60	0.52	0.25
	Stage 3	S03-63-1	63	495	345	330	210	60	60	0.63	0.55
		S03-63-2		585	255	390	150	60	60	0.74	0.65
		S03-63-3		315	525	210	330	60	60	0.41	0.35
		S03-63-4		225	615	150	390	60	60	0.29	0.25
	Stage 4	S04-82-1	82	315	525	330	210	60	60	0.41	0.55
		S04-82-2		225	615	390	150	60	60	0.29	0.65
		S04-82-3		495	345	210	330	60	60	0.63	0.35
		S04-82-4		585	255	150	390	60	60	0.74	0.25
Group 2	Stage 5	S05-72-1	72	405	435	270	270	60	60	0.52	0.45
		S05-80-2	80	382.5	427.5	255	255	90	90	0.53	0.43
		S05-80-3		360	420	240	240	120	120	0.54	0.40
	Stage 6	S06-79-1	79	405	375	270	270	120	60	0.59	0.45
		S06-79-2		405	255	270	270	240	60	0.74	0.45
		S06-79-3		345	435	270	270	120	60	0.52	0.45
		S06-79-4		225	435	270	270	240	60	0.52	0.45

		S06-64-5	64	345	375	270	270	180	60	0.59	0.45
		S06-64-6		285	315	270	270	240	60	0.59	0.45
	Stage 7	S07-91-1	91	405	435	270	210	60	120	0.52	0.45
		S07-91-2		405	435	270	150	60	180	0.52	0.45
		S07-91-3		405	435	210	270	60	120	0.52	0.35
		S07-91-4		405	435	150	270	60	180	0.52	0.25
		S07-64-5	64	405	435	210	210	60	180	0.52	0.35
		S07-64-6		405	435	180	180	60	240	0.52	0.30
Group 3	Stage 8	S08-34-1	34	337.5	412.5	225	225	150	150	0.55	0.38
		S08-34-2		315	405	210	210	180	180	0.56	0.35
		S08-34-3		292.5	397.5	195	195	210	210	0.57	0.33
		S08-34-4		270	390	170	170	240	240	0.58	0.28
	Stage 9	S09-66-1	66	900	N/A	600	600	N/A	N/A	N/A	N/A
		S09-66-2		337.5	412.5	225	225	150	150	0.55	0.38
		S09-66-3		315	405	210	210	180	180	0.56	0.35
		S09-66-4		292.5	397.5	195	195	210	210	0.57	0.33
	Stage 10	S10-66-1	66	600	N/A	600	600	N/A	N/A	N/A	N/A
		S10-66-2		337.5	112.5	225	225	150	150	0.88	0.38
		S10-66-3		315	105	210	210	180	180	0.89	0.35
		S10-66-4		292.5	97.5	195	195	210	210	0.91	0.33

Table 2 Test results and predictions by Equations (2) and (3)

Group	Stage	Beam reference	Experiment V_{Exp} (kN)	$V_{Eq(2)}$ (kN)	$V_{Eq(3))}$ (kN)	$\frac{V_{Eq(2)}}{V_{Exp}}$	$\frac{V_{Eq(3)}}{V_{Exp}}$
Group 1	Stage 1	S01-72-1	352.8	110.9	155.0	0.31	0.44
		S01-72-2	415.8	70.5	138.4	0.17	0.33
		S01-72-3	422.4	160.0	180.8	0.38	0.43
		S01-72-4	422.2	223.2	227.4	0.53	0.54
	Stage 2	S02-70-1	347.7	187.5	198.9	0.54	0.57
		S02-70-2	401.8	240.5	232.8	0.60	0.58
		S02-70-3	267.9	77.8	127.5	0.29	0.48
		S02-70-4	240.5	23.6	89.7	0.10	0.37
	St	S03-63-1	303.1	146.7	168.5	0.48	0.56

For Peer Review

Group	Stage	Beam reference	Experiment V_{Exp} (kN)	$V_{Eq(2)}$ (kN)	$V_{Eq(3))}$ (kN)	$\frac{V_{Eq(2)}}{V_{Exp}}$	$\frac{V_{Eq(3)}}{V_{Exp}}$
		S03-63-2	254.1	164.3	180.4	0.65	0.71
		S03-63-3	189.7	111.0	137.1	0.59	0.72
		S03-63-4	177.6	92.7	113.6	0.52	0.64
	Stage 4	S04-82-1	454.2	240.6	246.7	0.53	0.54
		S04-82-2	457.8	344.3	342.4	0.75	0.75
		S04-82-3	232.3	49.3	128.0	0.21	0.55
		S04-82-4	185.1	N/A*	84.4	N/A*	0.46
Group 2	Stage 5	S05-72-1	309.1	134.3	167.0	0.43	0.54
		S05-80-2	193.2	121.1	165.9	0.63	0.86
		S05-80-3	112.8	103.7	155.0	0.92	1.37
	Stage 6	S06-79-1	166.8	114.3	164.3	0.69	0.99
		S06-79-2	122.6	72.5	147.6	0.59	1.20
		S06-79-3	174.4	129.3	155.3	0.74	0.89
		S06-79-4	122.8	129.3	155.3	1.05	1.27
		S06-64-5	146.1	114.3	164.3	0.78	1.12
		S06-64-6	138.2	114.3	164.3	0.83	1.19
	Stage 7	S07-91-1	306.6	144.5	190.1	0.47	0.62
		S07-91-2	157.9	144.5	190.1	0.91	1.20
		S07-91-3	135.2	75.9	120.5	0.56	0.89
		S07-91-4	111.8	23.4	84.3	0.21	0.75
		S07-64-5	109.8	83.8	149.4	0.76	1.36
		S07-64-6	81.4	53.6	128.5	0.66	1.58
Group 3	Stage 8	S08-34-1	88.1	69.2	82.9	0.79	0.94
		S08-34-2	87.0	56.5	75.9	0.65	0.87
		S08-34-3	79.5	44.1	68.9	0.56	0.87
		S08-34-4	72.4	25.3	58.1	0.35	0.80
	Stage 9	S09-66-1	489.5	248.1	227.2	0.51	0.46
		S09-66-2	125.6	82.0	128.6	0.65	1.02

For Peer Review

Group	Stage	Beam reference	Experiment V_{Exp} (kN)	$V_{Eq(2)}$ (kN)	$V_{Eq(3))}$ (kN)	$\frac{V_{Eq(2)}}{V_{Exp}}$	$\frac{V_{Eq(3)}}{V_{Exp}}$
		S09-66-3	93.2	66.2	118.9	0.71	1.28
		S09-66-4	78.9	50.7	109.2	0.64	1.38
	Stage 10	S10-66-1	657.6	701.6	569.4	1.07	0.87
		S10-66-2	583.1	164.0	256.7	0.28	0.44
		S10-66-3	334.5	132.4	237.3	0.40	0.71
		S10-66-4	174.4	101.3	218.0	0.58	1.25
		Average				0.57	0.82
		Standard deviation				0.23	0.33

* The negative strength values which indicate zero-bearing capacity

For Peer Review